SH 380P

Full-Motion TV Wall Mount

Fits most 65″ ~ 120″ flat & curved TVs

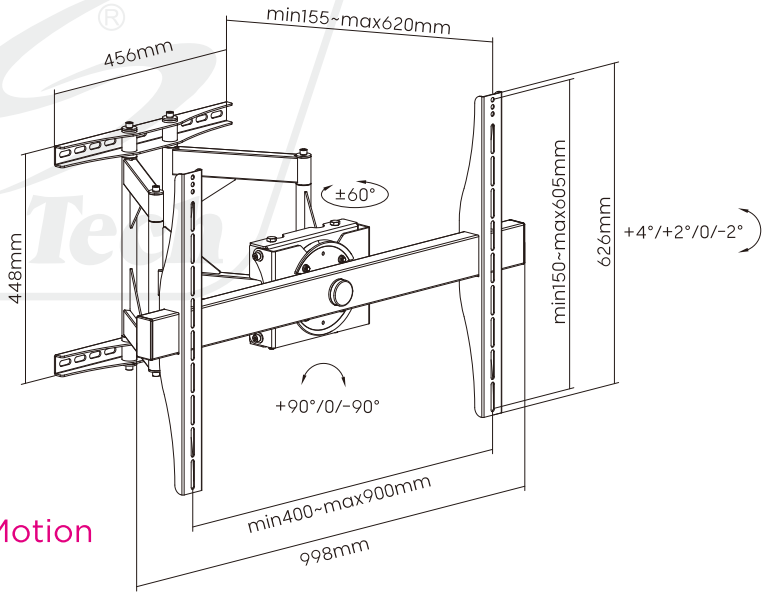

Unleash the Ultimate Viewing Freedom:
Tilt, Swivel and Rotate with the Slim Full-Motion TV Mount!

Screen Size	VESA Compatible	Weight Capacity	Profile to Wall	Tilt Range	Swivel Range	Screen Level	Curved TV
65″ ~ 120″	**400x200 400x300 400x400 400x600 600x400 700x400 800x400 600x600 800x500 800x600 900x600**	**150kg/330lbs**	**155-620mm/ 6.1″-24.4″**	**+4° ~ -2°**	**+60° ~ -60°**	**+90° ~ -90°**	